GreenVision Xceed Pro

BRP58

# Exceeding excellence on Road

Engineered for excellence, Xceed Pro has been upgraded to reduce costs while enhancing efficiency, safety, and functionality. Its refined design seamlessly blends a clean and attractive aesthetic with superior performance, ensuring it complements modern streetscapes. Beyond its visual appeal, Xceed Pro delivers cutting-edge capabilities: future-proof technology, industry-leading efficacy, world-class lighting design, effortless maintenance, flexible installation, smart connectivity. Furthermore, the range thoughtfully addresses environmentally sensitive road and street lighting needs by offering options with low blue spectrum color temperatures, ensuring harmony with both urban and natural surroundings.

## Benefits

- Excellent light: Efficacy, Photometric, Lumen maintenance
- Excellent versatility: Architecture, Mechanism, Quality
- Excellent care: Earth, Human, Wildlife
- Excellent intelligence: Sensing, Communication, Control

## Applications

- Motorways, inter-urban main roads, boulevards and avenues, roundabouts, pedestrian crossings
- Residential streets, side streets, squares, parks, cycle and pedestrian paths, playgrounds
- Parking areas, industrial areas, petrol stations, rail yards, airports, harbors, waterways



Data subject to change

## Features

- High efficacy as 170lm/W and more, even with glass cover
- Quality light with world-leading light control and light utility
- Thoughtful mechanism design for easy installation and maintenance
- Support carbon reduction with a circularity design
- Human and wildlife sensitive with low blue light and low CCT options
- Ready for Node and/or Sensor, and connection into Smart Systems like Interact City

## Versions

Xceed Pro

Xceed Pro

Xceed Pro

Xceed Pro

Xceed Pro

Xceed Pro

Xceed Pro

Xceed Pro

Xceed Pro

Xceed Pro

Xceed Pro

Xceed Pro

Xceed Pro

Xceed Pro

Xceed Pro

## Dimensional drawing

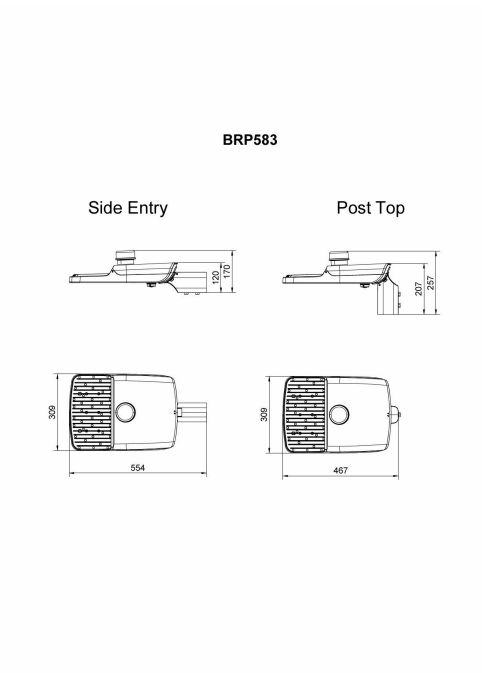


BRP583 LED312/NW 200W DM PSRD

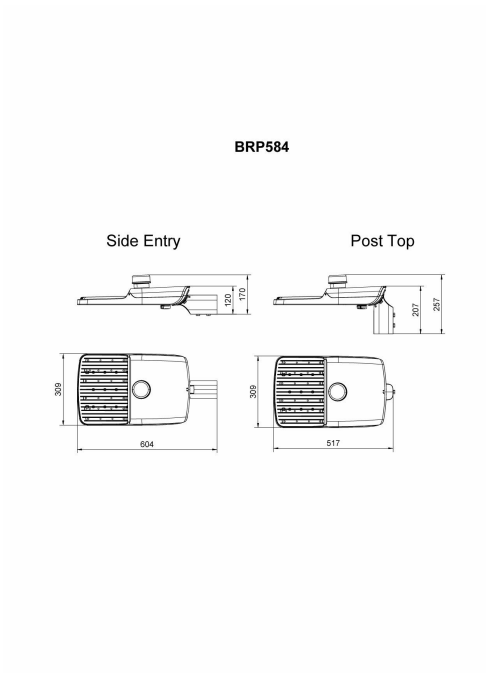


BRP584 LED321/NW 190W DM GL



Data subject to change

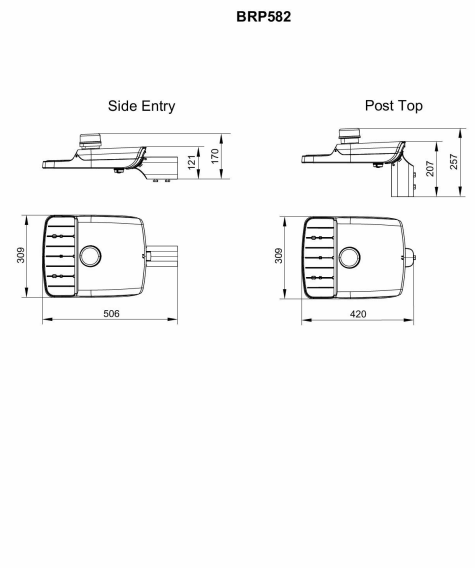


BRP582 LED137/NW 80W DM GL

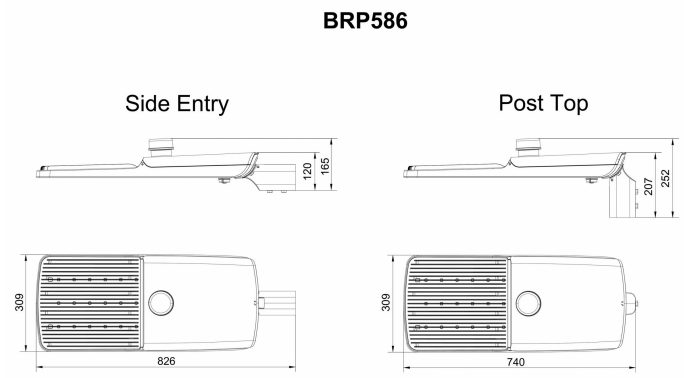


BRP586 LED559/NW 360W DM PSRD

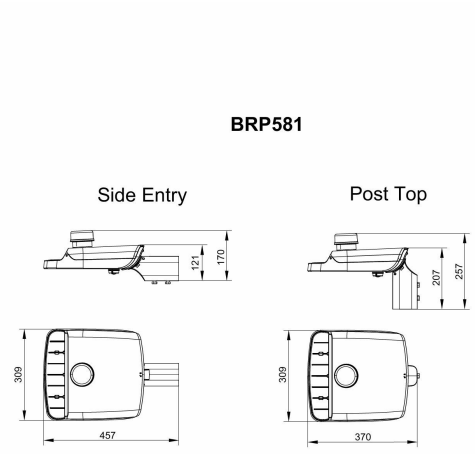


BRP581 LED80/NW 50W DM PSRD

## General Information

| | |
|---|---|
| Driver included | Yes |

### Light Technical

| | |
|---|---|
| Correlated Color Temperature (Nom) | 4000 K |
| Color rendering index (CRI) | 70 |
| Light source color | White |

### Controls and Dimming

| | |
|---|---|
| Dimmable | Yes |

### Mechanical and Housing

| | |
|---|---|
| Housing Color | RAL7040 |
| Ingress protection code | IP66 [Dust penetration-protected, jet-proof] |
| Mech. impact protection code | IK09 [10 J] |
| Optical cover type | Tempered glass |

### Approval and Application

| | |
|---|---|
| CE mark | Yes |

## Light Technical

| Order Code | Full Product Name | Luminous Flux |
|---|---|---|
| 911401685909 | BRP582 LED159/NW 100W DM PSRD | 15,900 lm |
| 911401686009 | BRP582 LED191/NW 120W DM PSRD | 19,100 lm |
| 911401686109 | BRP582 LED232/NW 150W DM PSRD | 23,200 lm |
| 911401688109 | BRP582 LED222/NW 150W DM GL | 22,200 lm |
| 911401689809 | BRP582 LED167/NW 100W DM PSRD | 16,700 lm |
| 911401690609 | BRP582 LED152/NW 90W DM GL | 15,200 lm |
| 911401690709 | BRP582 LED137/NW 80W DM GL | 13,700 lm |
| 911401693109 | BRP582 LED195/NW 120W DHW II PSD LA | 19,500 lm |
| 911401687009 | BRP583 LED303/NW 200W DM PSD P7 | 30,300 lm |
| 911401691009 | BRP583 LED254/NW 150W DM PSD P7 | 25,400 lm |
| 911401694209 | BRP586 LED350/NW 210W DW2 SR SRTB LA | 35,000 lm |
| 911401694309 | BRP586 LED527/NW 320W DW2 SR SRTB LA | 52,700 lm |
| 911401686409 | BRP584 LED379/NW 250W DM PSRD | 37,900 lm |
| 911401688309 | BRP584 LED338/NW 220W DM GL | 33,800 lm |
| 911401689409 | BRP584 LED342/NW 200W DM PSRD | 34,200 lm |
| 911401689509 | BRP584 LED313/NW 180W DM PSRD | 31,300 lm |
| 911401690409 | BRP584 LED321/NW 190W DM GL | 32,100 lm |

| Order Code | Full Product Name | Luminous Flux |
|---|---|---|
| 911401693209 | BRP584 LED331/NW 200W DHW II PSD LA | 33,100 lm |
| 911401687209 | BRP586 LED557/NW 360W DM PSD P7 | 55,700 lm |
| 911401690809 | BRP586 LED507/NW 300W DM PSD P7 | 50,700 lm |
| 911401693409 | BRP586 LED515/NW 310W DM1 II PSD P7 LA | 51,500 lm |
| 911401687109 | BRP584 LED341/NW 220W DM PSD P7 | 34,100 lm |
| 911401690909 | BRP584 LED325/NW 190W DM PSD P7 | 32,500 lm |
| 911401693309 | BRP584 LED331/NW 200W DHW II PSD P7 LA | 33,100 lm |
| 911401686209 | BRP583 LED284/NW 180W DM PSRD | 28,400 lm |
| 911401686309 | BRP583 LED312/NW 200W DM PSRD | 31,200 lm |
| 911401688209 | BRP583 LED310/NW 200W DM GL | 31,000 lm |
| 911401689609 | BRP583 LED258/NW 150W DM PSRD | 25,800 lm |
| 911401689709 | BRP583 LED208/NW 120W DM PSRD | 20,800 lm |
| 911401690509 | BRP583 LED254/NW 150W DM GL | 25,400 lm |
| 911401686909 | BRP582 LED229/NW 150W DM PSD P7 | 22,900 lm |
| 911401691109 | BRP582 LED169/NW 100W DM PSD P7 | 16,900 lm |
| 911401693509 | BRP582 LED196/NW 120W DW2 SR P7 LA | 19,600 lm |
| 911401686509 | BRP586 LED449/NW 290W DM PSRD | 44,900 lm |
| 911401686609 | BRP586 LED559/NW 360W DM PSRD | 55,900 lm |
| 911401688409 | BRP586 LED547/NW 360W DM GL | 54,700 lm |
| 911401689109 | BRP586 LED547/NW 330W DM PSRD | 54,700 lm |
| 911401689209 | BRP586 LED507/NW 300W DM PSRD | 50,700 lm |
| 911401689309 | BRP586 LED427/NW 250W DM PSRD | 42,700 lm |
| 911401690309 | BRP586 LED504/NW 300W DM GL | 50,400 lm |
| 911401686709 | BRP581 LED47/NW 30W DM PSD P7 | 4,700 lm |
| 911401686809 | BRP581 LED121/NW 80W DM PSD P7 | 12,100 lm |
| 911401691209 | BRP581 LED85/NW 50W DM PSD P7 | 8,500 lm |
| 911401691309 | BRP581 LED33/NW 20W DM PSD P7 | 3,300 lm |
| 911401687809 | BRP586 LED446/NW 290W DM SR 7TSB | 44,600 lm |
| 911401691909 | BRP586 LED540/NW 330W DM SR 7TSB | 54,000 lm |
| 911401693609 | BRP586 LED350/NW 210W DW2 SR 7TSB LA | 35,000 lm |
| 911401693709 | BRP586 LED529/NW 320W DW2m SR 7TSB LA | 52,900 lm |
| 911401685609 | BRP581 LED34/NW 20W DM PSRD | 3,400 lm |
| 911401685709 | BRP581 LED80/NW 50W DM PSRD | 8,000 lm |
| 911401685809 | BRP581 LED124/NW 80W DM PSRD | 12,400 lm |
| 911401687909 | BRP581 LED91/NW 60W DM GL | 9,100 lm |
| 911401688009 | BRP581 LED121/NW 80W DM GL | 12,100 lm |
| 911401689909 | BRP581 LED83/NW 50W DM PSRD | 8,300 lm |
| 911401690009 | BRP581 LED35/NW 20W DM PSRD | 3,500 lm |
| 911401693009 | BRP581 LED100/NW 60W DM II PSD LA | 10,000 lm |
| 911401692009 | BRP583 LED252/NW 150W DM SR 7TSB | 25,200 lm |

| Order Code | Full Product Name | Luminous Flux |
|---|---|---|
| 911401687709 | BRP582 LED229/NW 150W DM SR 7TSB | 22,900 lm |
| 911401692109 | BRP582 LED153/NW 90W DM SR 7TSB | 15,300 lm |
| 911401687509 | BRP581 LED47/NW 30W DM SR 7TSB | 4,700 lm |
| 911401687609 | BRP581 LED121/NW 80W DM SR 7TSB | 12,100 lm |
| 911401692209 | BRP581 LED83/NW 50W DM SR 7TSB | 8,300 lm |
| 911401692309 | BRP581 LED33/NW 20W DM SR 7TSB | 3,300 lm |

## Operating and Electrical

| Order Code | Full Product Name | Power Consumption |
|---|---|---|
| 911401685909 | BRP582 LED159/NW 100W DM PSRD | 100 W |
| 911401686009 | BRP582 LED191/NW 120W DM PSRD | 120 W |
| 911401686109 | BRP582 LED232/NW 150W DM PSRD | 150 W |
| 911401688109 | BRP582 LED222/NW 150W DM GL | 150 W |
| 911401689809 | BRP582 LED167/NW 100W DM PSRD | 100 W |
| 911401690609 | BRP582 LED152/NW 90W DM GL | 90 W |
| 911401690709 | BRP582 LED137/NW 80W DM GL | 80 W |
| 911401693109 | BRP582 LED195/NW 120W DHW II PSD LA | 120 W |
| 911401687009 | BRP583 LED303/NW 200W DM PSD P7 | 200 W |
| 911401691009 | BRP583 LED254/NW 150W DM PSD P7 | 150 W |
| 911401694209 | BRP586 LED350/NW 210W DW2 SR SRTB LA | 210 W |
| 911401694309 | BRP586 LED527/NW 320W DW2 SR SRTB LA | 320 W |
| 911401686409 | BRP584 LED379/NW 250W DM PSRD | 250 W |
| 911401688309 | BRP584 LED338/NW 220W DM GL | 220 W |
| 911401689409 | BRP584 LED342/NW 200W DM PSRD | 200 W |
| 911401689509 | BRP584 LED313/NW 180W DM PSRD | 180 W |
| 911401690409 | BRP584 LED321/NW 190W DM GL | 190 W |
| 911401693209 | BRP584 LED331/NW 200W DHW II PSD LA | 200 W |
| 911401687209 | BRP586 LED557/NW 360W DM PSD P7 | 360 W |
| 911401690809 | BRP586 LED507/NW 300W DM PSD P7 | 300 W |
| 911401693409 | BRP586 LED515/NW 310W DM1 II PSD P7 LA | 310 W |
| 911401687109 | BRP584 LED341/NW 220W DM PSD P7 | 220 W |
| 911401690909 | BRP584 LED325/NW 190W DM PSD P7 | 190 W |
| 911401693309 | BRP584 LED331/NW 200W DHW II PSD P7 LA | 200 W |
| 911401686209 | BRP583 LED284/NW 180W DM PSRD | 180 W |
| 911401686309 | BRP583 LED312/NW 200W DM PSRD | 200 W |
| 911401688209 | BRP583 LED310/NW 200W DM GL | 200 W |
| 911401689609 | BRP583 LED258/NW 150W DM PSRD | 150 W |
| 911401689709 | BRP583 LED208/NW 120W DM PSRD | 120 W |

| Order Code | Full Product Name | Power Consumption |
|---|---|---|
| 911401690509 | BRP583 LED254/NW 150W DM GL | 150 W |
| 911401686909 | BRP582 LED229/NW 150W DM PSD P7 | 150 W |
| 911401691109 | BRP582 LED169/NW 100W DM PSD P7 | 100 W |
| 911401693509 | BRP582 LED196/NW 120W DW2 SR P7 LA | 120 W |
| 911401686509 | BRP586 LED449/NW 290W DM PSRD | 290 W |
| 911401686609 | BRP586 LED559/NW 360W DM PSRD | 360 W |
| 911401688409 | BRP586 LED547/NW 360W DM GL | 360 W |
| 911401689109 | BRP586 LED547/NW 330W DM PSRD | 330 W |
| 911401689209 | BRP586 LED507/NW 300W DM PSRD | 300 W |
| 911401689309 | BRP586 LED427/NW 250W DM PSRD | 250 W |
| 911401690309 | BRP586 LED504/NW 300W DM GL | 300 W |
| 911401686709 | BRP581 LED47/NW 30W DM PSD P7 | 30 W |
| 911401686809 | BRP581 LED121/NW 80W DM PSD P7 | 80 W |
| 911401691209 | BRP581 LED85/NW 50W DM PSD P7 | 50 W |
| 911401691309 | BRP581 LED33/NW 20W DM PSD P7 | 20 W |
| 911401687809 | BRP586 LED446/NW 290W DM SR 7TSB | 290 W |
| 911401691909 | BRP586 LED540/NW 330W DM SR 7TSB | 330 W |
| 911401693609 | BRP586 LED350/NW 210W DW2 SR 7TSB LA | 210 W |
| 911401693709 | BRP586 LED529/NW 320W DW2m SR 7TSB LA | 320 W |
| 911401685609 | BRP581 LED34/NW 20W DM PSRD | 20 W |
| 911401685709 | BRP581 LED80/NW 50W DM PSRD | 50 W |
| 911401685809 | BRP581 LED124/NW 80W DM PSRD | 80 W |
| 911401687909 | BRP581 LED91/NW 60W DM GL | 60 W |
| 911401688009 | BRP581 LED121/NW 80W DM GL | 80 W |
| 911401689909 | BRP581 LED83/NW 50W DM PSRD | 50 W |
| 911401690009 | BRP581 LED35/NW 20W DM PSRD | 20 W |
| 911401693009 | BRP581 LED100/NW 60W DM II PSD LA | 60 W |
| 911401692009 | BRP583 LED252/NW 150W DM SR 7TSB | 150 W |
| 911401687709 | BRP582 LED229/NW 150W DM SR 7TSB | 150 W |
| 911401692109 | BRP582 LED153/NW 90W DM SR 7TSB | 90 W |
| 911401687509 | BRP581 LED47/NW 30W DM SR 7TSB | 30 W |
| 911401687609 | BRP581 LED121/NW 80W DM SR 7TSB | 80 W |
| 911401692209 | BRP581 LED83/NW 50W DM SR 7TSB | 50 W |
| 911401692309 | BRP581 LED33/NW 20W DM SR 7TSB | 20 W |

© 2026 Signify Holding. All rights reserved. The information provided herein is subject to change, without notice. Signify does not give any representation or warranty as to the accuracy or completeness of the information included herein and shall not be liable for any action in reliance thereon. The information presented in this document is not intended as any commercial offer and does not form part of any quotation or contract, unless otherwise agreed by Signify. All trademarks are owned by Signify Holding or their respective owners.