PHILIPS

RoadFlair ECO

BRP490

LED road lighting easy transformer

RoadFlair ECO is a newly designed road lighting product, set to meet customers' requirements, including high lumen efficacy for energy saving and sustainability, aesthetic design for nice shape and appearance, quality material and components for product reliability and long lifetime, professional optic for lighting application fulfilment, dimming and system control interface for improving municipal operations and offering future-proof features. RoadFlair ECO's competitive price would help on the acceleration of road lighting LED transformation, to more sustainable society and smarter city.

Benefits

- High lumen efficacy for energy saving
- Robust quality and reliability
- Professional optic for various road applications
- Control interface for system compatibility
- Economical LED alternative to conventional street lights

Applications

- Pedestrian Road
- Residential Road
- Interchange
- Highway Road

Features

- Two housing types covering up to 18Klm
- Typical 150lm/W, high lumen efficacy for energy saving
- Robust quality and reliability, 100Khrs lifetime
- Professional optic for road applications
- 1-10V dimming interface for system compatibility

Data subject to change

Versions

Road Flair Eco

Road Flair Eco

Road Flair Eco

Road Flair Eco

Dimensional drawing

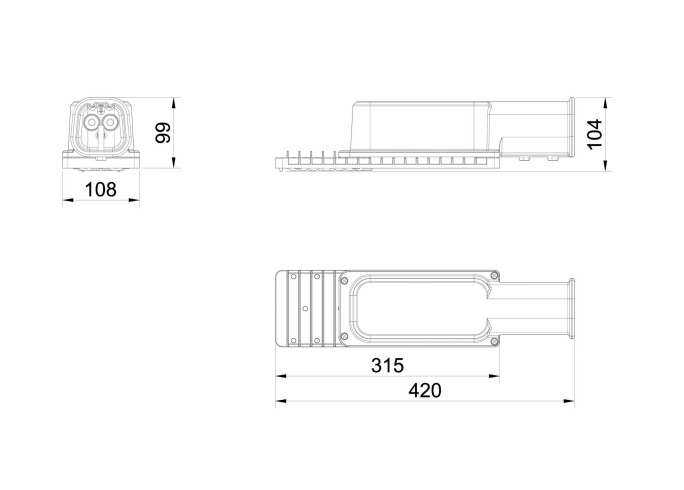

BRP490 LED99/NW 70W DW2n PSA SP1 GC

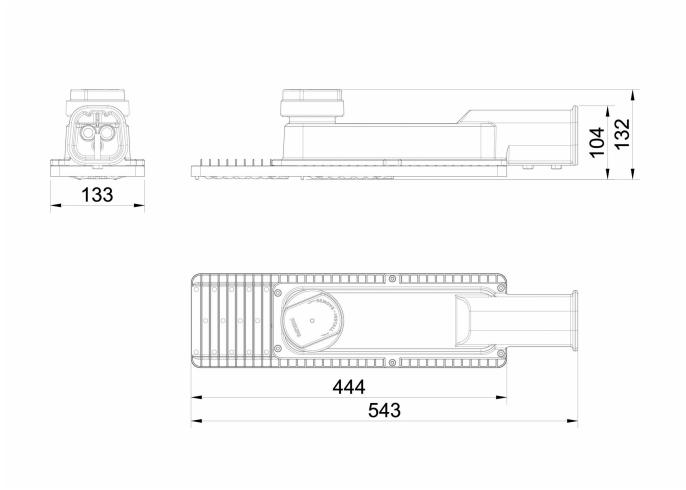

BRP490L LED181/NW 120W DW2n PSA SP1P5 GC

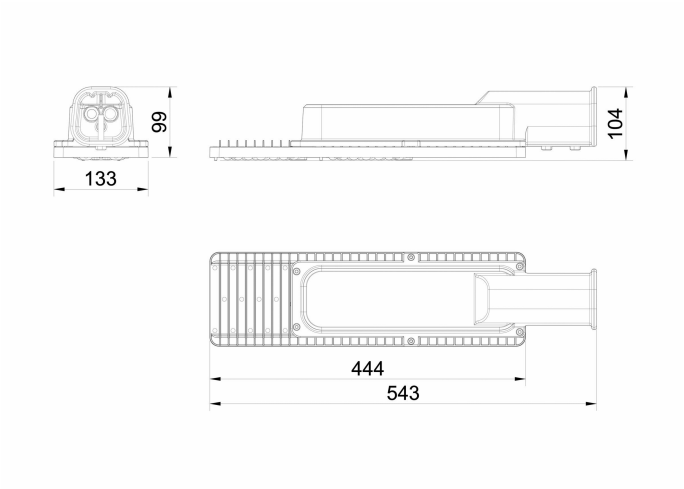

BRP490L LED157/NW 100W DW2n PSA SP1 GC

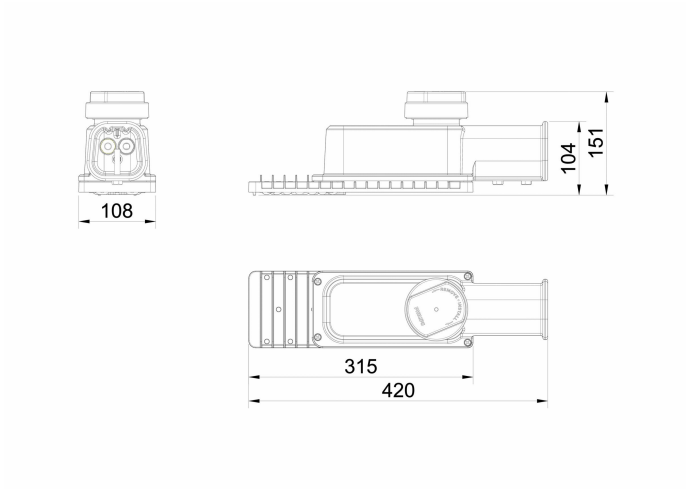

BRP490 LED47/WW 30W DW2n PSA SP1 P5 GC

Data subject to change

General Information

Gear	-
Driver included	Yes
Service tag	Yes

Light Technical

Color rendering index (CRI)	70

Mechanical and Housing

Housing Color	RAL7040
Ingress protection code	IP66 [Dust penetration-protected, jet-proof]
Mech. impact protection code	IK08 [5 J vandal-protected]
Optical cover type	Polycarbonate bowl/cover UV-resistant

Approval and Application

Flammability mark	-
CE mark	Yes

Light Technical

Order Code	Full Product Name	Luminous Flux	Correlated Color Temperature (Nom)	Light source color
911401647509	BRP490 LED99/NW 70W DW2n PSA SP1 GC	9,900 lm	4000 K	740 neutral white
911401647609	BRP490 LED75/NW 50W DW2n PSA GC	7,500 lm	4000 K	740 neutral white
911401647709	BRP490 LED48/NW 30W DW2n PSA GC	4,800 lm	4000 K	740 neutral white
911401648409	BRP490 LED73/WW 50W DW2n PSA SP1 P5 GC	7,300 lm	3000 K	730 warm white
911401648509	BRP490 LED47/WW 30W DW2n PSA SP1 P5 GC	4,700 lm	3000 K	730 warm white
911401647809	BRP490L LED181/NW 120W DW2n PSA SP1P5 GC	18,100 lm	4000 K	740 neutral white
911401647209	BRP490L LED181/NW 120W DW2n PSA SP1 GC	18,100 lm	4000 K	740 neutral white
911401647309	BRP490L LED157/NW 100W DW2n PSA SP1 GC	15,700 lm	4000 K	740 neutral white
911401647409	BRP490L LED124/NW 80W DW2n PSA SP1 GC	12,400 lm	4000 K	740 neutral white
911401679809	BRP490L LED182/WW 120W DW2n PSRD SP1	18,200 lm	3000 K	730 warm white
911401679909	BRP490L LED150/WW 100W DW2n PSRD SP1	15,000 lm	3000 K	730 warm white
911401680009	BRP490L LED122/WW 80W DW2n PSRD SP1	12,200 lm	3000 K	730 warm white
911401680209	BRP490L LED187/NW 120W DW2n PSRD SP1	18,700 lm	4000 K	740 neutral white
911401680309	BRP490L LED154/NW 100W DW2n PSRD SP1	15,400 lm	4000 K	740 neutral white
911401680409	BRP490L LED126/NW 80W DW2n PSRD SP1	12,600 lm	4000 K	740 neutral white

Operating and Electrical

Order Code	Full Product Name	Power Consumption
911401647509	BRP490 LED99/NW 70W DW2n PSA SP1 GC	70 W
911401647609	BRP490 LED75/NW 50W DW2n PSA GC	50 W
911401647709	BRP490 LED48/NW 30W DW2n PSA GC	30 W
911401648409	BRP490 LED73/WW 50W DW2n PSA SP1 P5 GC	50 W
911401648509	BRP490 LED47/WW 30W DW2n PSA SP1 P5 GC	30 W
911401647809	BRP490L LED181/NW 120W DW2n PSA SP1P5 GC	120 W
911401647209	BRP490L LED181/NW 120W DW2n PSA SP1 GC	120 W
911401647309	BRP490L LED157/NW 100W DW2n PSA SP1 GC	100 W
911401647409	BRP490L LED124/NW 80W DW2n PSA SP1 GC	80 W
911401679809	BRP490L LED182/WW 120W DW2n PSRD SP1	120 W
911401679909	BRP490L LED150/WW 100W DW2n PSRD SP1	100 W
911401680009	BRP490L LED122/WW 80W DW2n PSRD SP1	80 W
911401680209	BRP490L LED187/NW 120W DW2n PSRD SP1	120 W
911401680309	BRP490L LED154/NW 100W DW2n PSRD SP1	100 W
911401680409	BRP490L LED126/NW 80W DW2n PSRD SP1	80 W

Controls and Dimming

Order Code	Full Product Name	Dimmable
911401647509	BRP490 LED99/NW 70W DW2n PSA SP1 GC	Yes
911401647609	BRP490 LED75/NW 50W DW2n PSA GC	Yes
911401647709	BRP490 LED48/NW 30W DW2n PSA GC	Yes
911401648409	BRP490 LED73/WW 50W DW2n PSA SP1 P5 GC	Yes
911401648509	BRP490 LED47/WW 30W DW2n PSA SP1 P5 GC	Yes
911401647809	BRP490L LED181/NW 120W DW2n PSA SP1P5 GC	Yes
911401647209	BRP490L LED181/NW 120W DW2n PSA SP1 GC	Yes
911401647309	BRP490L LED157/NW 100W DW2n PSA SP1 GC	Yes
911401647409	BRP490L LED124/NW 80W DW2n PSA SP1 GC	Yes
911401679809	BRP490L LED182/WW 120W DW2n PSRD SP1	No
911401679909	BRP490L LED150/WW 100W DW2n PSRD SP1	No
911401680009	BRP490L LED122/WW 80W DW2n PSRD SP1	No
911401680209	BRP490L LED187/NW 120W DW2n PSRD SP1	No
911401680309	BRP490L LED154/NW 100W DW2n PSRD SP1	No
911401680409	BRP490L LED126/NW 80W DW2n PSRD SP1	No

© 2026 Signify Holding. All rights reserved. The information provided herein is subject to change, without notice. Signify does not give any representation or warranty as to the accuracy or completeness of the information included herein and shall not be liable for any action in reliance thereon. The information presented in this document is not intended as any commercial offer and does not form part of any quotation or contract, unless otherwise agreed by Signify. Philips and the Philips Shield Emblem are registered trademarks of Koninklijke Philips N.V.